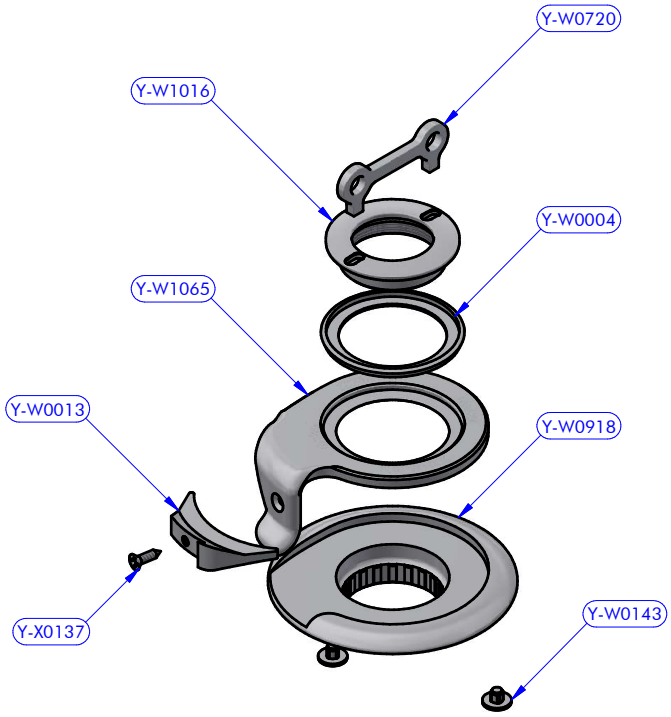

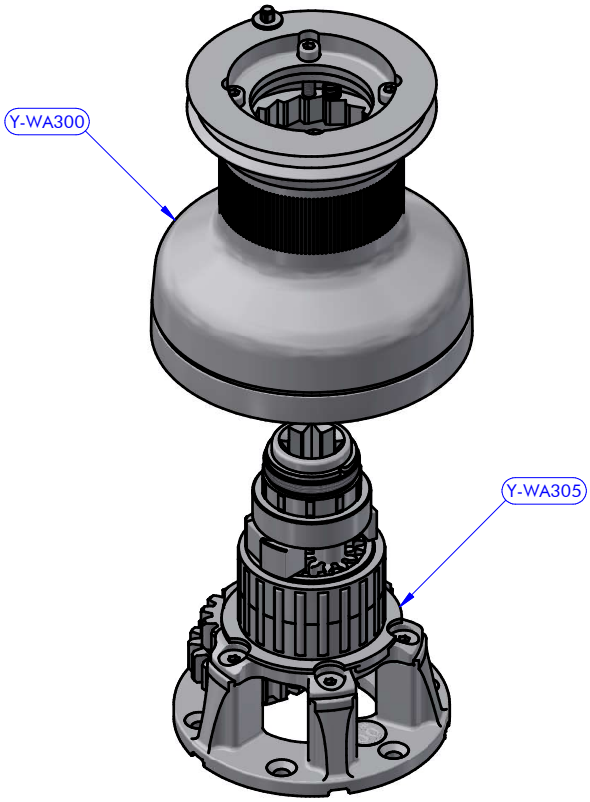

PART LIST			
CODE	DESCRIPTION	MATERIAL	Q.TY
Y-W0004	Upper cap	Plastic	1
Y-W0013	Stripper	Plastic	1
Y-W0143	ST plug	Plastic	3
Y-W0720	Opening tool	S.Steel	1
Y-W0918	Upper disk	Aluminium	1
Y-W1016	Upper cap	Aluminium	1
Y-W1065	Self-tailing arm	Aluminium	1
Y-WA300	Drum	Various	1
Y-WA305	Base + Gears assy	Various	1
Y-X0137	Screw	S.Steel	1

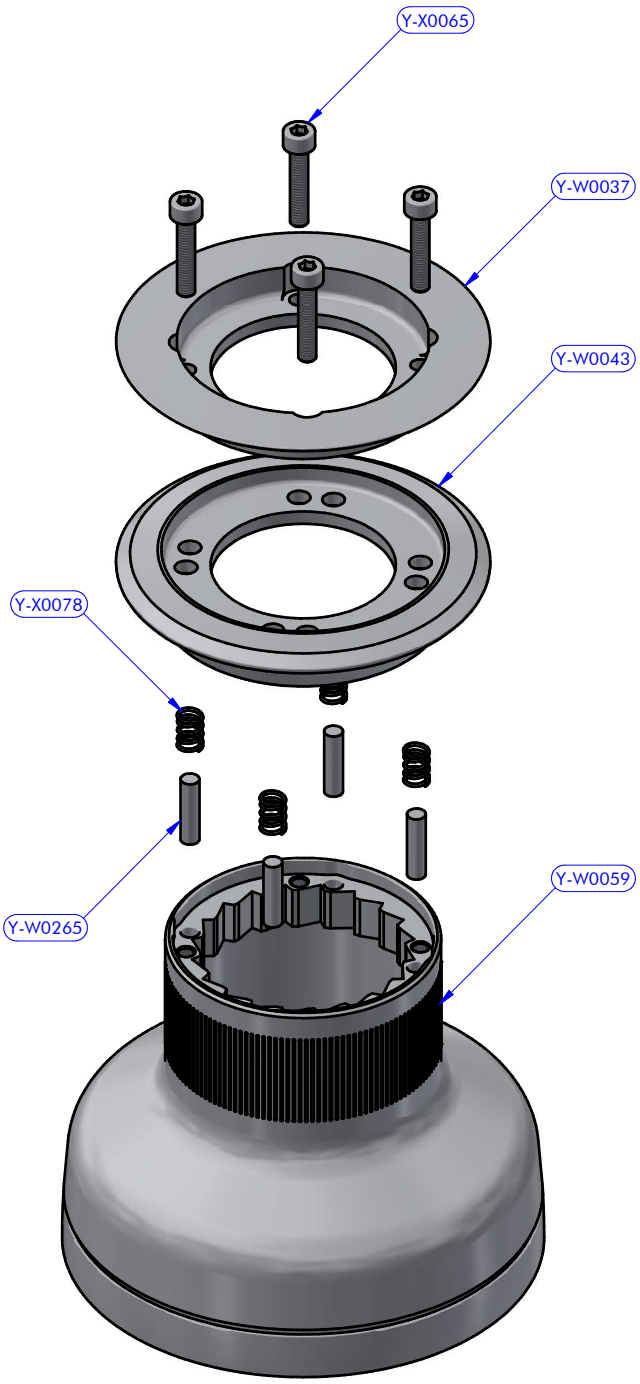

Y-WA300
Drum XT30.2 AL/R + ST Disks

PART LIST			
CODE	DESCRIPTION	MATERIAL	Q.TY
Y-W0037	Foot control corps	Aluminium	1
Y-W0043	ST lower disk	Aluminium	1
Y-W0059	Drum	Aluminium	1
Y-W0265	Cylinder pin	S.Steel	4
Y-X0065	Screw	S.Steel	4
Y-X0078	Compression spring	S.Steel	4

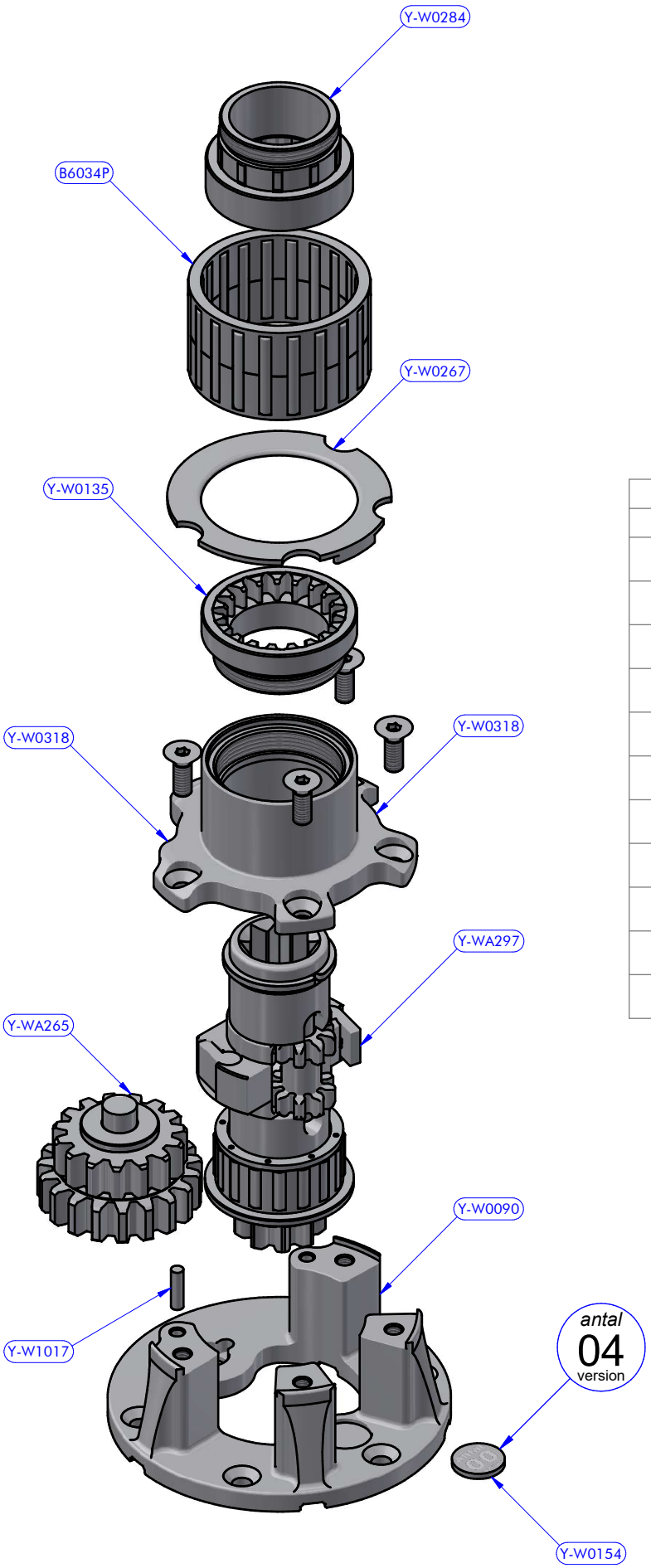

Y-WA305

Base + Gears + Shaft assy XT30.2 R

PART LIST			
CODE	DESCRIPTION	MATERIAL	Q.TY
B6034P	Roller bearing	Plastic / Peek	1
Y-W0090	Base	Aluminium	1
Y-W0135	Stem	Chromed brass	1
Y-W0154	I.D. tag	Aluminium	1
Y-W0267	Drum washer	Plastic	1
Y-W0284	Upper Stem	Chromed brass	1
Y-W0318	Stem	Aluminium	1
Y-W1017	Cylinder pin	S.Steel	2
Y-WA265	Gears kit	Various	1
Y-WA297	Main shaft assy	Various	1
Y-X0062	Screw	S.Steel	4

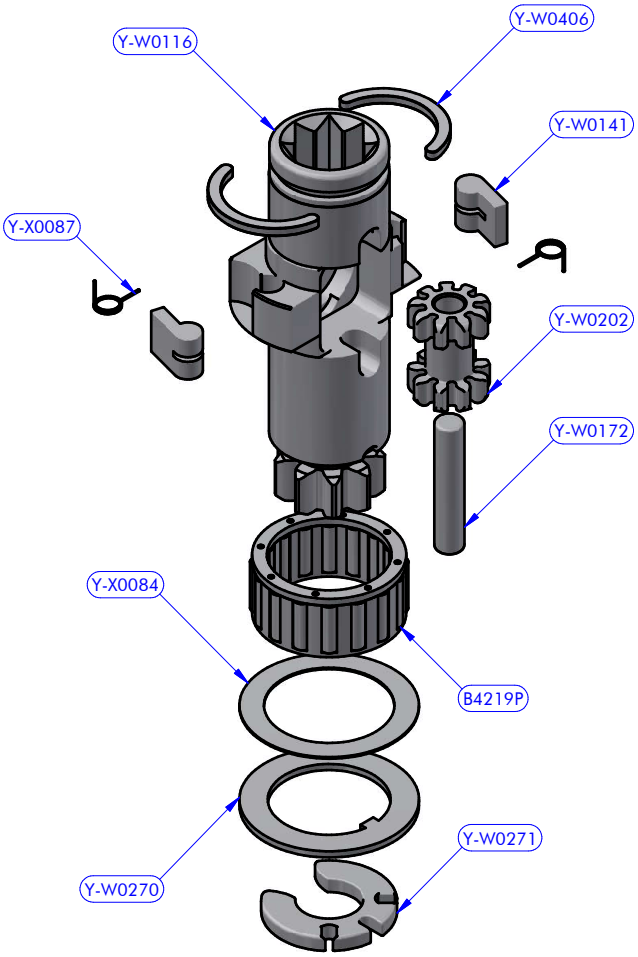

Y-WA297
Main shaft assy XT30.2 R

PART LIST			
CODE	DESCRIPTION	MATERIAL	Q.TY
B4219P	Roller bearing	Plastic / Peek	1
Y-W0116	Main shaft	S.Steel	1
Y-W0141	Pawl	S.Steel	2
Y-W0172	Gear axis	S.Steel	1
Y-W0202	Satellite gear	Bronze	1
Y-W0270	Special washer	S.Steel	1
Y-W0271	Sector	Plastic	1
Y-W0406	Half-ring	Brass	2
Y-X0084	Washer	Tufnol	1
Y-X0087	Torsion spring	S.Steel	2

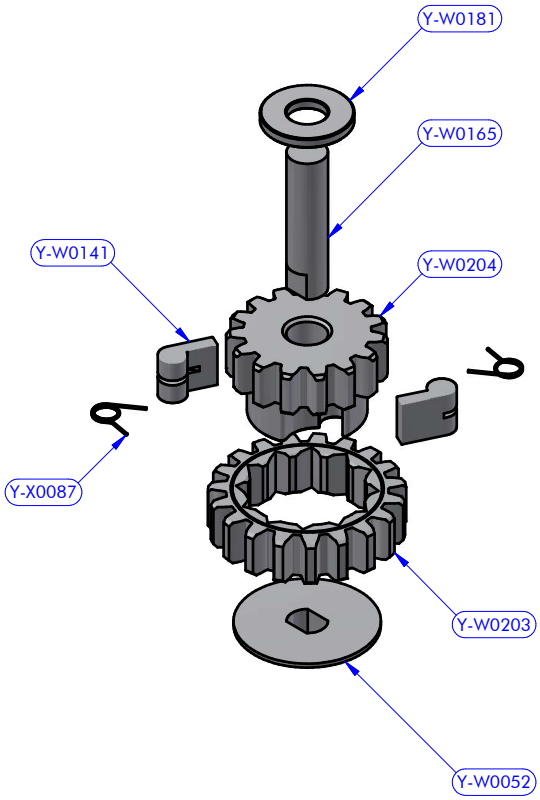

Y-WA265
Gears kit XT30/30.2 Axis "B"

PART LIST			
CODE	DESCRIPTION	MATERIAL	Q.TY
Y-W0052	Gear lower washer	Plastic	1
Y-W0141	Pawl	S.Steel	2
Y-W0165	Gear axis	S.Steel	1
Y-W0181	Pipe spacer	Plastic	1
Y-W0203	Gear "B1"	Bronze	1
Y-W0204	Gear "B2"	Bronze	1
Y-X0087	Torsion spring	S.Steel	2